Residual Amplitude Modulation of an optical phase modulator

exail

Principle of phase modulation

Exail phase modulators are produced in standard lithium niobate ($LiNbO_3$) with the following processes:

- Annealed Proton Exchange (APE) or Titanium-in-Diffusion for the waveguide.
- Lumped electrodes (low frequency <200 MHz).
- Travelling wave electrodes (High frequency 10-50 GHz).

The phase modulator is an optical waveguide which modulates the phase of the optical carrier via an external voltage applied on the travelling wave electrodes (see figure 1). The modulation relies on the electro-optic effect - the modification of the refractive index caused when an electric field is applied.

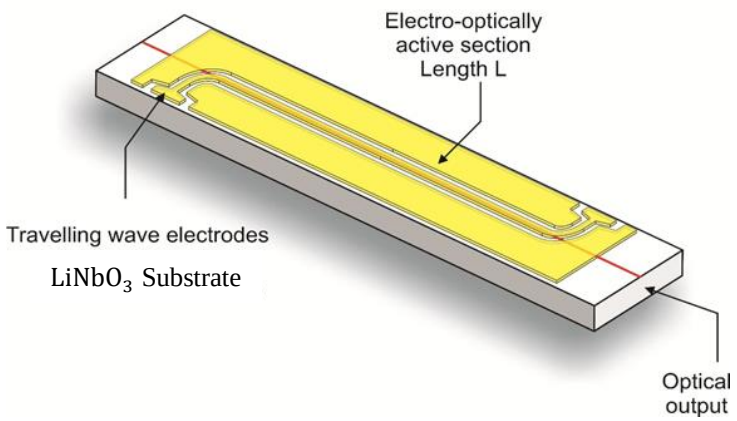

Figure 1: Phase Modulator diagram

Phase modulators are widely deployed in fiber systems, including the following examples of applications:

- Spectroscopy,
- Frequency side band generation in cold atoms optics & atoms clock,
- Spectral broadening to prevent SBS in intense laser systems,
- Coherent beams combining,
- Laser wavelength locking (Pound Drever Hall), …

To adress all these apllications Exail Phase Modulators are available for any wavelength windows from 780 nm up to 2000 nm with the following important characteristics:

- Insertion loss (IL).
- Driving voltage (V_p).
- Modulation bandwidth (EO BW).
- Polarization extinction ratio (PER) or polarization dependent loss (PDL).
- Residual Amplitude Modulation (RAM).

The aim of this document is to explain the Residual Amplitude Modulation, to understand the choices made to deal with it, and to give an example with PDH locking.

RAM Parameter

The **Residual Amplitude Modulation** (RAM) is a key parameter for some applications. It corresponds to the ratio between the voltage dependent power modulation and the total average power transmitted by the phase modulator $P(t) = P_o + \varepsilon V(t)$ with V(t): the time dependent applied voltage.

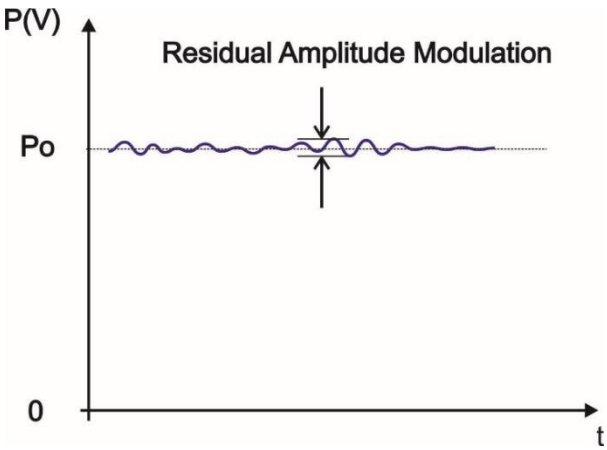

Figure 2: Schematic of RAM

The Peak-to-Peak RAM is expressed by the formula: $RAM_{dB} = 10.\log_{10}\frac{\varepsilon V_{pp}}{P_o}$

RAM is expected to be close to zero in a perfect phase modulator, but several issues contribute to degrade the RAM parameter.

Expected RAM: remaining resonant cavity contribution

The input and output facets of the waveguide are tilted (see figure 3). So the crystal behaves as a weak optical resonator cavity. It leads to a low amplitude modulation at the output of the waveguide due to interferences occurring between the main guided wave and the parasitic reflected waves.

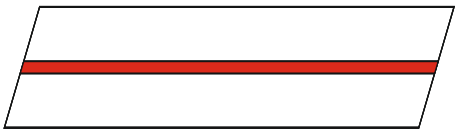

Figure 3: Schematic of the modulator and its waveguide

The Peak-To-Peak RAM originated from the resonator is given by

$$RAM_{dB} \approx 10\log_{10}\frac{4R}{1-R^2}$$

Where R is the Fresnel reflection coefficient in power at the facet interface for non-tilted input and output facets of the waveguide.

It is thus the Fresnel reflection coefficient weighted by the return coupling loss: $R = \eta(\alpha).R_{Fresnel}$. It depends on the refractive indexes, the wavelength, the tilted angle, … We expect a resonant cavity **RAM of around 28-30 dB.**

Unexpected RAM: optical modal contribution

By applying a peak-to-peak voltage of 20 V at 100 kHz to the modulator we can measure the output optical power of the phase modulator. We observe oscillating responses (see figure 4 and 5).

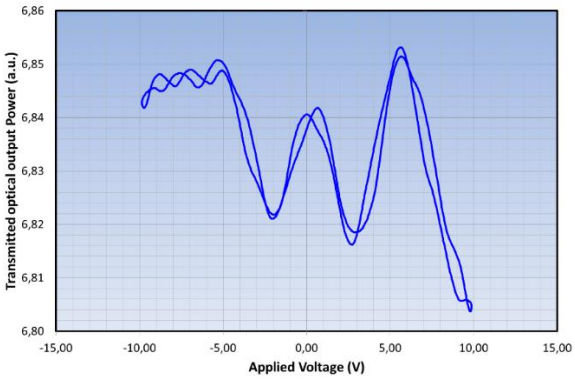

Figure 4: RAM Vs the applied voltage (1060 nm APE waveguide phase modulator)

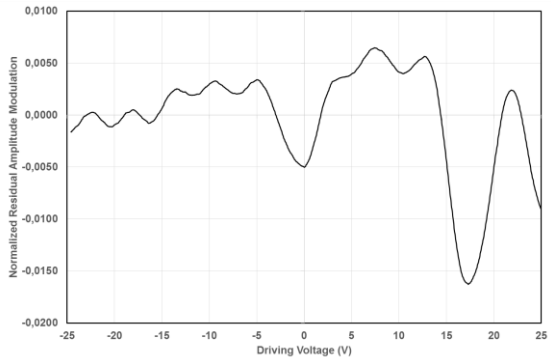

Figure 5: RAM Vs applied voltage (1550 nm Ti-In-Diff waveguide phase modulator)

Both waveguide's technique shows the same results:

- The amplitude of the fringes is not uniform with the applied voltage and the fringe pattern shows a contrast growing with the applied voltage.
- For negative voltage applied, the RAM of the APE waveguide reaches the expected value of -28 dB making RAM and for the Ti-in-Diffusion, the RAM of the spurious oscillations, -30 dB peak to peak, agrees with the expected value and below -5 V only some fringes remain. It confirms the interpretation of a RAM produced by the residual resonant cavity.
- For positive voltage, the amplitude of the fringes reaches unexpected values around 20 dB for both techniques, and the difference with the negative voltage are crystal clear on the figures. The question that arises is: what is the origin of the larger oscillations when the applied voltage is positive?

Considering the voltage induced electro-optic index profile to see its impact may be the solution. [1]

The electro-optic induced graded index is much wider than the doped optical waveguide, it can be as high as 40 µm. This implies that the electro-optic waveguide is bi-modal unlike the doped optical waveguide which is mono-modal. The problem is that the area below the electrodes behaves as a

large two-mode coupling section making it possible for the incoming wave to interact with the second mode (see figure 6).

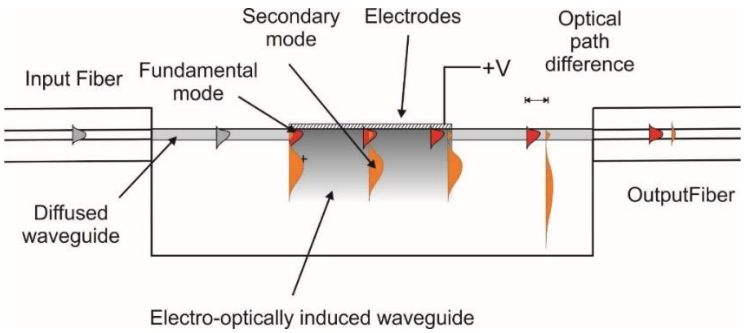

Figure 6: Diffused waveguide and the waves modes' behavior

The incoming wave can then be coupled to the fundamental mode and to the electro-optically induced secondary mode. Similarly, at the electrodes output, the two delayed waves can be coupled at the output fiber to interfere, producing undesired amplitude modulation.

Simulations were carried out thanks to finite-difference Beam Propagation Method (FD-BPM) program (see figure 7). The gradient index profile induced by the electric field is considered and extends below the electrodes with a depth that can be as large as 40 µm. Simulation shows that for a positive electric field an electro-optically induced amplitude modulation can be revealed. The corresponding peak-to-peak RAM increases with the positive applied voltage and decreases for negative applied voltage.

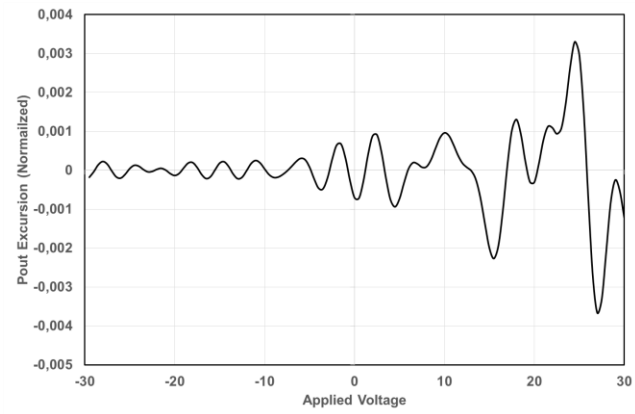

Figure 7: Output power Vs Applied voltage

It confirms the experimental observations, but new experiments were made to confirm this. A 1550 nm tunable laser light is launched into the waveguide, a low frequency modulation voltage is applied to the electrodes and a DC bias voltage is added to the electrodes. The detected signal is connected to an electrical spectrum analyzer and the response is recorded in order to display only the low-level residual amplitude modulation

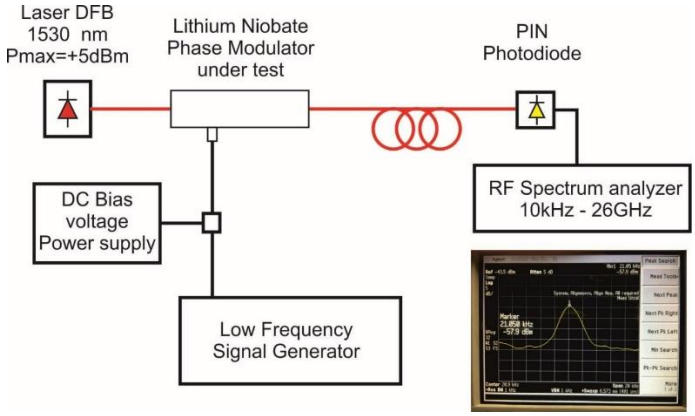

Figure 8: Experimental set-up

We plot the wavelength dependence to check the optical delay on figure 9.

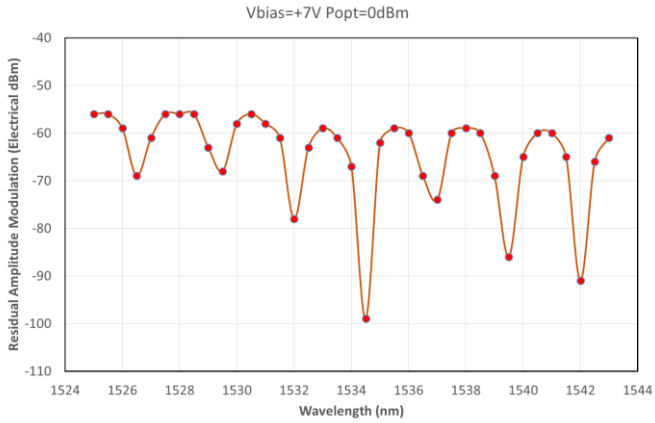

Figure 9: RAM Vs Wavelength

It confirms the model of a two waves interferometer below the electrodes at positive voltage.

To summarize, only resonant cavity modulation cannot solely explain the RAM effect: an additional DC bias reveals differences of behavior of the RAM depending on the sign of the additional DC voltage. A model of an electrically induced waveguide, where RAM is produced below the electrodes by a parasitic interferometer and mode coupling, explains it. A simple FD-BPM model was used to reproduce the RAM behavior at the modulator output.

Based on our interpretation residual amplitude modulation can be strongly reduced thanks to a permanent DC voltage corresponding to a global negative index variation, cancelling out the deep electrical induced waveguide. This low and permanent DC voltage (5-15 V) is enough to reduced RAM by more than 10 dB, compared to an unbiased modulator working at its best (-28 dB) (see figure 10).

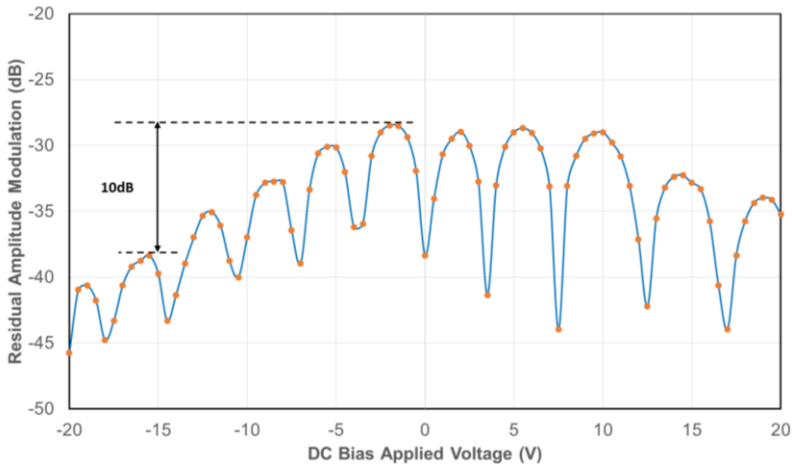

Figure 10: RAM of an MPX-LN-0.1 at 1530 nm with $P_{in} = 2\ mW$

Example of RAM impact on PDH

PDH stands for Pound Drever Hall. It corresponds to the stabilization of the wavelength / optical frequency of a laser source thanks to an absolute reference (Etalon, spectroscopic gas cell, …). It can be achieved thanks to phase modulation. PDH efficiency can be ultimately limited by the frequency noise of the laser source.

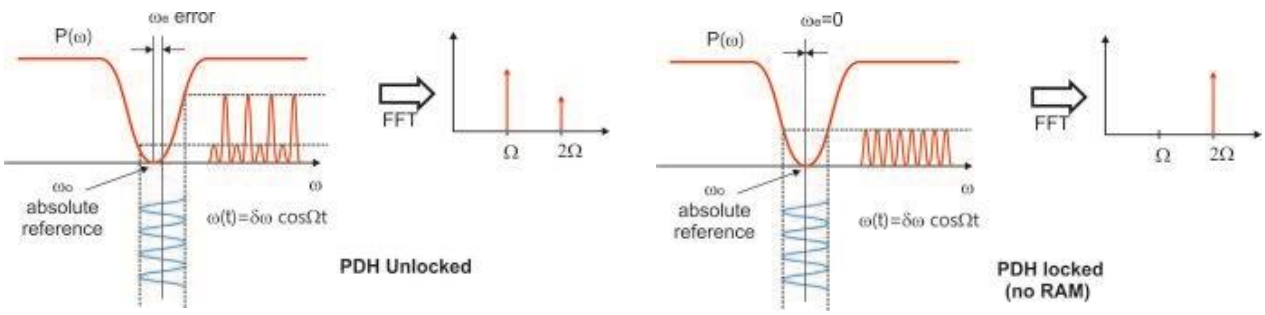

Figure 11: PDH representation without RAM taken into account

Phase modulation at Ω is applied to the source to generate frequency modulation on a range $\delta\Omega$ (see figure 12). Then the frequency modulation is converted into an amplitude modulation by the discrimination on the slopes of the reference Etalon. The feedback loop locks the laser at the absolute reference thanks to a harmonic's optimization.

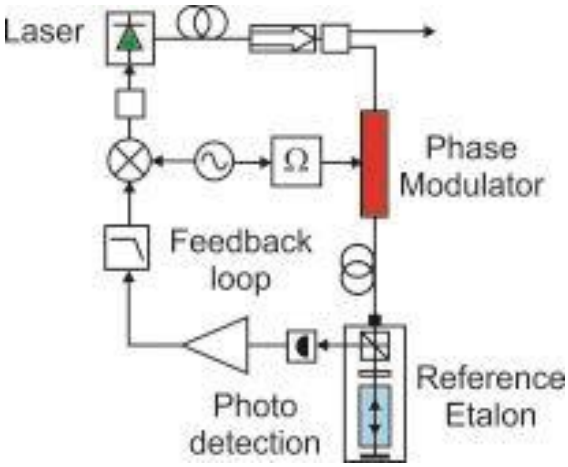

Figure 12: Set-up

The modulator is a NIR-MPX-LN-0.1, a NIR-MPX800-LN-0.1 or a MPX-LN-0.1 depending on the operating laser wavelength. Note that they embed a high internal RF load and thus, they can handle the permanent DC signal without any damage.

In case of use in a PDH application, amplitude harmonics can be combined with the harmonics issued from the PDH frequency to the amplitude discrimination. The consequence is that the wavelength lock-in occurs with an error value ω_e proportional to the modulation range $\delta\omega$ and to the $RAM = \frac{\epsilon.V}{P_0}$

Applying a low and permanent DC voltage (5-15 V) is enough to reduce the RAM by more than 10 dB, compared to an unbiased modulator. The resulting RAM >30 dB fits the requirements of a PDH application (see figure 13) where sensitivity limitations are related to shot and thermal noise.

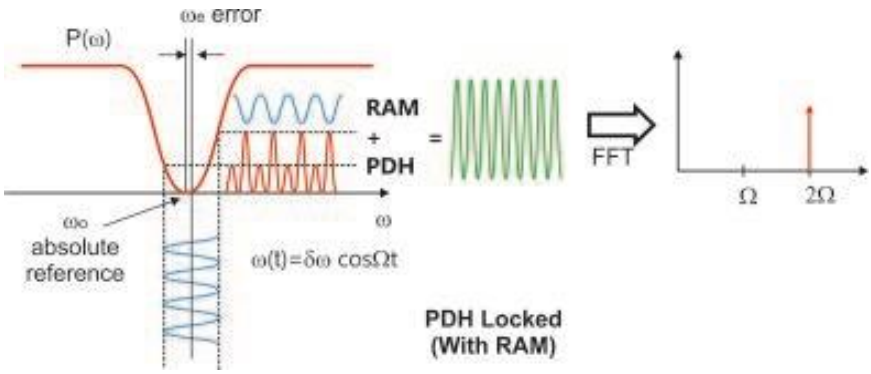

Figure 13: PDH representation with RAM contained

Conclusion

The Residual Amplitude Modulation (RAM) corresponds to the ratio between the voltage dependent power modulation and the total average power transmitted by the phase modulator.

Only resonant cavity modulation cannot solely explain the RAM effect: an additional DC bias reveals differences of behavior of the RAM depending on the sign of the additional DC voltage. A model of an electrically induced waveguide where RAM is produced below the electrodes by a parasitic interferometer and mode coupling explains it.

With our interpretation of RAM, it can be strongly reduced thanks to a permanent DC voltage corresponding to a global negative index variation, cancelling out the deep electrical induced waveguide. This low and permanent DC voltage is enough to reduced RAM by more than 10 dB, compared to an unbiased modulator allowing our components to fit the requirement for applications such as PDH.

References

> [1]: ‘Residual Amplitude Modulation of optical phase modulators’’, H. Porte, TD-1-1-1, Photonics North 2018